Alle Rechte vorbehalten/ *All rights reserved*

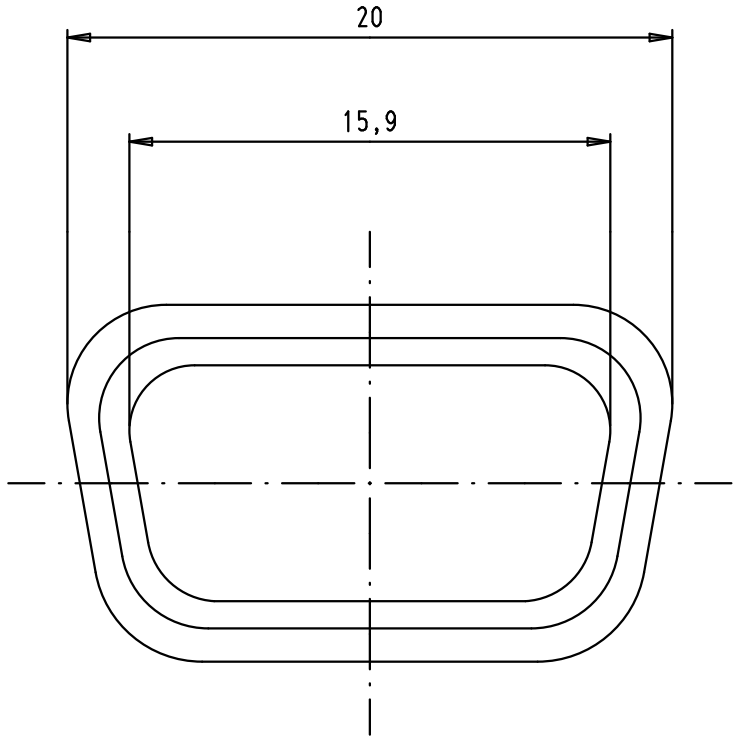

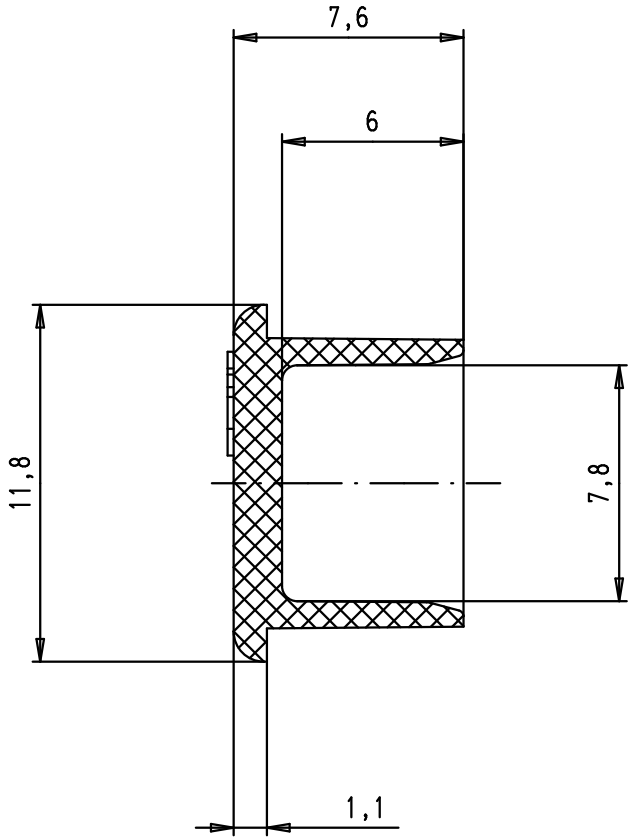

				Dat.	Name			Maßstab/ *Scale*
			Detail.	19/03/07	PK	All Dim. in mm Orig. Size DIN A 4	Metallized plastic dust cap for D-sub female 9 poles	4:1
			Insp.					
			Stand.					
33962	19/03/07	PK	HARTING EURL F-95972 Paris				TB 09 67 009 0714	Blatt/ *Page* 1/1
Mod.	Dat.	Name					Sub.	